Issued by the
Administrator of Vehicle Standards
in consultation with the
Australian Motor Vehicle Certification Board
comprising Commonwealth, State and Territory representatives

DEPARTMENT OF TRANSPORT AND REGIONAL SERVICES

CIRCULAR 62/00-9 - 1

TEST PROCEDURES

ADR 62/00 - Mechanical Connections Between Vehicles

"A Guide for Inspectors"

This Circular is relevant to the Third Edition of the

Australian Design Rules gazetted as

National Standards under the Motor Vehicle Standards Act

CONTENTS

ERRATUM

The equation given in item 3.2.2 of page 22 of 27 of Circular 62100-9-1 is incorrect. The correct equation is:

3.2.2 Calculation of D-Value for ME, NB and NC Vehicles. The D-value for the dynamic or static test force required for these vehicles may be calculated from the m s of the towing vehicle and the Aggregate Trailer Mass marked on the towbar, according to the following equation

$$D = \frac{G_k \times G_a}{G_k + G_a}$$

Where
D = D - value in tonnes
G_k = mass of towing vehicle in tonnes
G_A = aggregate trailer mass for which the towbar is rated in tonnes
(AS2213-1984 Section 4) (Section 3.1.3)

SCOPE

This procedure when read in conjunction with Australian Design Rule 62/00 -'Mechanical Connections between Vehicles'and other Circulars issued by the Administrator provides sufficient information, without reference to other standards, to conduct and audit tests related to the requirements of devices for mechanical connections between vehicles and their fitment. The equipment, orders of accuracy and step by step actions described in this procedure are drawn from the standards and recommended practices quoted in the ADR and from accepted testing and laboratory practices. While conformance with this procedure is sufficient to demonstrate compliance with the ADR, other equipment, orders of accuracy and procedures may be used provided it can be shown that they demonstrate compliance with the ADR. Several of the test procedures used in this Circular are taken from relevant Australian Standards as referred to in the ADR. These procedures are reprinted by arrangement with Standards Australia. For convenient reference the ADR and Australian Standard Clause Numbers are quoted in brackets against appropriate paragraphs in this procedure. This procedure is intended primarily as a guide for officers of the Australian Department of Transport and Communications or Agents acting on behalf of the Administrator when they carry out audit inspections of Test Facilities or witness tests for compliance with the ADR. This and other Circulars dealing with Test Procedures for ADRs may also be useful to vehicle manufacturers and testing organizations. Nothing in this Circular, however, absolves the manufacturer from complying with the requirements as specified in the ADR which always remains the primary reference.

1. SELECTION OF TEST COMPONENTS

In general only production components are satisfactory for testing to the requirements of this Design Rule. However prototype assemblies maybe tested provided that they are fully representative of production components in respect of material, treatment, including welding and dimensions.

1.1 Applicable. Assemblies

All towing and hitch assemblies, except for Road Trains (see Circular 63100-9-1) used between a towing vehicle and a trailer are subject of this Design Rule.

The particular towing hitch by virtue of its towing capacity will be dedicated to appropriate categories of towing vehicles and the appropriate category of trailer. For each test program all relative components are to be uniquely identified by part number, drawing number and revision or issue status. Such information is to be included in all test records and reports.

1.2 Identification of Test Components

Test related components shall be representative of the design condition as reflected in the production drawings. The test components should be assembled using production parts which have passed through normal quality assurance procedures. They should then be identified against production drawings. If prototype components are used they should be individually inspected for both dimensional and material specification compliance given in their respective drawings.

2. EQUIPMENT AND TESTING PROCEDURES

Testing of towing connections, towbars, drawbars etc may be by dynamic or static testing procedures as described fbr each type of system. As the forces involved are large, substantial test rigs are required and in some cases need to be constructed to accept all or part of a vehicle, either a towing vehicle or trailer. Each part of the ADR for a particular connection type is described in the following sections some of which are extracts from the relevant Australian Standard. Where any part of the attached Australian Standard is not relevant for ADR 62100 it has had a line drawn through it.

2.1 Couplings

3.1.1 Fifth Wheel Assemblies (Clause 62.5.3.1)

The following test procedures are reproduced from AS 1773-1990 'Installation of Fifth Wheel and Turntable Assemblies' relevant to Fifth Wheel Kingpins.

Two test procedures are concerned:

3.11.1 Appendix A - Dynamic Test Method

3.1.1.2 Appendix B - Static Over Turning Moment Test Method

3.1.1.3 Appendix C. Selection of Fifth Wheel Assemblies. Describes the methods for the calculation of D-value ratings for the test methods described in Section 3.1.1.1 and 3.1.1.2

3.1.1.4 Section 2, Rating. Analysis of Test Results.

Issue 2: Page 5 of 27 CIRCULAR 62100-9-1

Section 3.1.1.1

APPENDIX A

DYNAMIC TEST METHOD

(This Appendix forms an integral part of this Standard.)

A1 SCOPE. This Appendix sets out a method for dynamic testing of fifth wheel assemblies.

A2 PRINCIPLE. Longitudinal alternating and vertical oscillating test loads are applied simultaneously for a specified number of cycles.

A3 APPARATUS. A test rig is required incorporating a test bed to mount the assembly. and a rigid pressure plate simulating the semitrailer skid plate to apply alternating longitudinal and vertical oscillating loadings simultaneously as shown in Figure AI and in accordance with Paragraph A4. Suitable measures shall be incorporated to ensure constant friction (no stiction) between the fifth wheel and the pressure plate, e.g. an intermediate polyamide layer (see Figure A1).
The longitudinal loading shall be applied by means of a kingpin complying with AS 2175.

NOTE: Additional components (i.e. attachment brackets) may be required to mount the assembly onto the test bed. These additional components are not regarded as part of the fifth wheel assembly under test.

A4 PROCEDURE.

A4.1 Inspection before testing. Before the test. the fifth wheel assembly shall be inspected. The results shall be recorded. and shall indicate that the assembly to be tested is free of breaks, cracks. separation of components, and malfunction.
Measurements of the closed jaw diameter (dimension A). the jaw thickness (dimension B) (see Figure 3.2), and other measurements shall be taken and recorded to allow the determination of wear and permanent deformation after the dynamic test (see Paragraph A4.4).

A4.2 Installation of assembly. The fifth wheel assembly and additional components (as applicable) shall be mounted on the test bed in a position geometrically identical with the position it will be mounted on the vehicle. and with the same mechanical attachments as nominated by the fifth wheel manufacturer and in accordance with AS 1771. Rubber or flexible components may be replaced with steel components of the same size prior to testing.

A4.3 Application of loadings. The application or dynamic longitudinal and vertical loadings shall be in accordance with the following:

(a) The longitudinal test load (D_T) and vertical test load (U_T) shall be applied simultaneously as shown in Figure A1.

(b) The longitudinal test load (D_T) and vertical test load (U_T) shall oscillate in a sinusoidat manner, and the number of cycles shall be not less than 2 x 10^6 for both D_T and U_T.
D_T shall alternate between +0.6D and -0.6D where D is the relevant longitudinal load rating (D-value rating) of the assembly (in kilonewtons).
U_T shall oscillate through the following values:

D, kN	U_T (min.), kN	U_T (max.), kN
= 80	55	82
> 80 =120	98	147
> 120	110	165

(c) The selected frequency shall not exceed 30 Hz. and shall be chosen not to coincide with the natural frequency of the system. The cycle rates of DT and UT shall differ by approximately 5%.

A4.4 Inspection. At the completion of the loading cycles, the assembly shall be inspected For any residual deformation that would interfere with or degrade the function of the tested fifth wheel assembly or its components, and for any breaks, cracks, separation of components, malfunction, or wear.
The measurements and inspection techniques shall be the same as for the inspection before testing (see Clause 2.2 and Paragraph A4.1), and the results shall be recorded.

A5 REPORT. The test report shall include the following information:

(a) Assembly identification (e.g. serial number), and nominal size of assembly (i.e. 50 mm or 90 mm).

(b) Test loadings. cycle rates, and number of cycles.

(c) Description of test apparatus.

(d) A statement whether there was any residual deformation that would interfere with or degrade the function of the tested fifth wheel assembly or its components, or any breaks, cracks, separation of components, malfunction, or wear.

(e) A statement indicating the inspection procedures before and after testing and an illustration of the measurements taken for the determination of wear and residual deformation (see Paragraphs A4.1 and A4.4), including the values for the closed jaw diameter (dimension A) and the jaw thickness (dimension B) (see Clause 2.2 and Figure 3.2) before and after testing.

~~(f) A reference to this test method, i.e. AS 1773, Appendix A~~

Section 3.1.1.1

AS 1773 – 1990 10

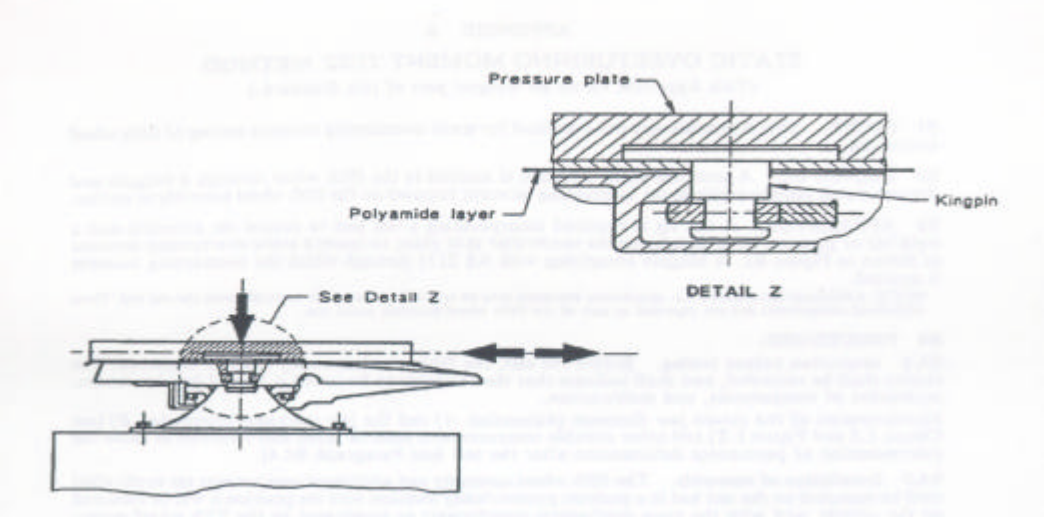

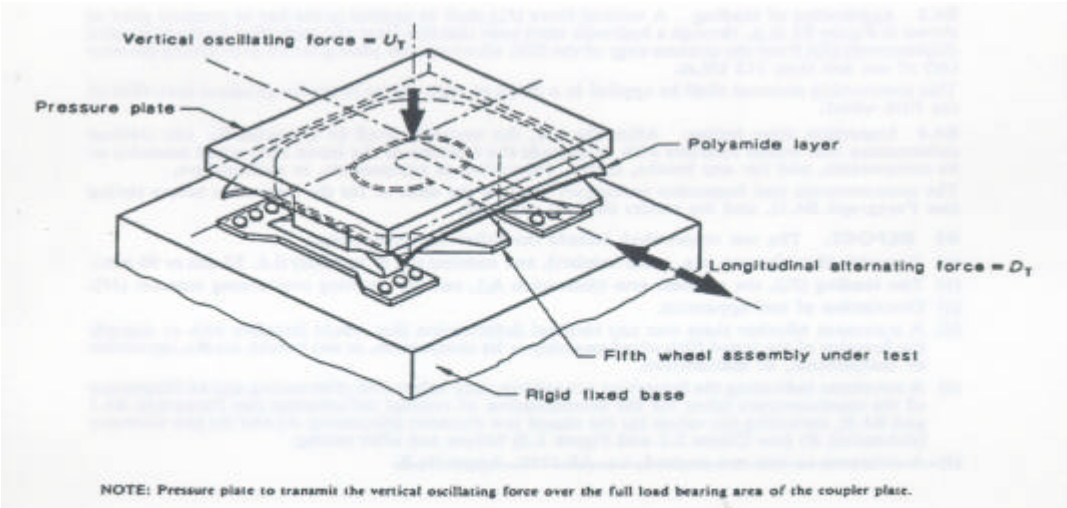

NOTE: Pressure plate to transmit the vertical oscillating force over the full load bearing area of the coupler plate.

FIGURE A1 APPLICATION OF LONGITUDINAL AND VERTICAL LOADINGS

Section 3.1.1.2

APPENDIX B

STATIC OVERTURNING MOMENT TEST METHOD
(This Appendix forms an integral part of this Standard.)

B1 SCOPE. This Appendix sets out a method for static overturning moment testing of fifth wheel assemblies.

B2 PRINCIPLE. A specified static test load is applied to the fifth wheel through a kingpin and simulated skid plate to replicate the overturning moment imposed on the fifth wheel assembly in seMce.

B3 APPARATUS. *A* test rig is required incorporating a test bed to mount the assembly and a rigid bar or pressure plate simulating the semitrailer skid plate. to apply a static overturning moment as shown in Figure Bl. A kingpin complying with AS 2175 through which the overturning momcnt is applied.

NOTE: Additional components (i.e. attachment brackets) may he required to mount the assembly onto the test bed. Thew additional components are not regarded as pan of the fifth wheel assembly under test.

B4 PROCEDURE.

B4.1 Inspection before testing. Before the test. the fifth wheel assembly shall be inspected. The results shall be recorded. and shall indicate that the assembly to be tested is free of breaks. cracks, separation of components, and malfunction.

Measurements of the closed jaw diameter (dimension A) and the jaw thickness (dimension 8) (see Clause 2.2 and Figure 3.2) and other suitable measurements shall be taken and recorded to allow the determination of permanent deformation after the test (see Paragraph B4.4).

B4.2 nstallation of assembly. The fifth wheel assembly and additional components (as applicable) shall be mounted on the test bed in a position geometrically identical with the position it will be mounted on the vehicle, and with the same mechanical attachments as nominated by the fifth wheel manufacturer and in accordance with AS 1771.

B4.3 Application of loading. A vertical force (F.) shall be applied to the bar or pressure plate as shown in Figure B I (e.g. through a hydraulic ram) such that this force (F.) multiplied by the horizontal displacement (hd) from the extreme edge of the fifth wheel coupler plate gives an overturning moment (A.0 of not less than 112 kN.m.

This overturning moment shall be applied in a plane at right angles to the longitudinal centrcline of the fifth wheel.

B4.4 Inspection after testing. After the test. the aumbly shall be inspected for any residual deformation that would interfere with or degrade the function of the tested fifth wheel assembly or its components, and for any breaks. cracks, separation of components. or malfunction.

The measurements and inspection techniques shall he the same as for the inspection before testing (see Paragraph B4.1), and the results shall be recorded.

B5 REPORT. The test report shall include the following information:

(a) Assembly identification (e.g. serial number), and nominal size of assembly (i.e. 50 mm or 90 mm).

(b) Test loading (F.). the moment arm (dimension Ad), and the resulting overturning moment (A1).

(c) Description of test apparatus.

(d) A statement whether there was any residual deformation that would interfere with or degrade the function of the tested fifth wheel assembly or its components. or any breaks, cracks, separation of components. or malfunction.

(e) A statement indicating the inspection procedures used before and after testing and an illustration of the measurements taken for the determination of residual deformation (see Paragraph B4.1 and B4.4), including the values for the closed jaw diameter (dimension A) and the jaw thickness (dimension B) ~ Clause 2.2 and Figure 3.2) before and after testing.

~~(f) A reference to this test method, i.e AS 1773, Appendix B~~

Section 3.1.1.2

AS 1773 – 1990 12

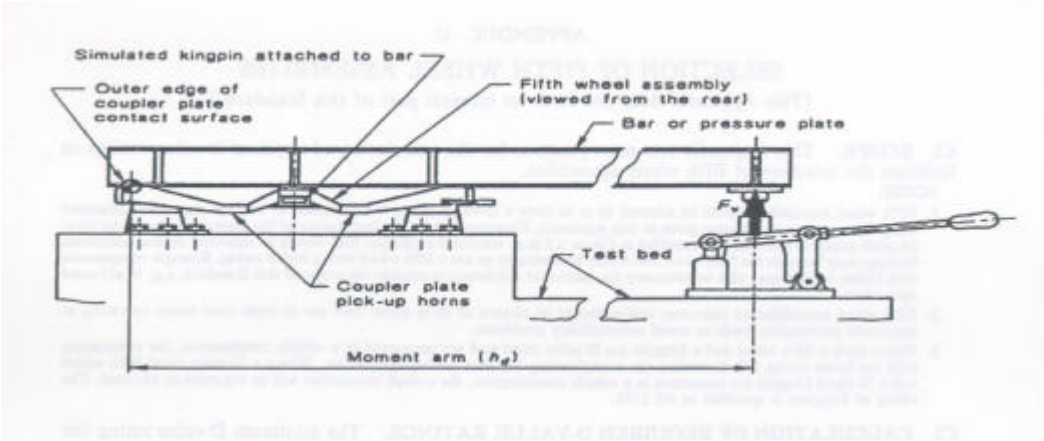

FIGURE B1 APPLICATION OF STATIC OVERTURNING MOMENT

Section 3.1.1.3

APPENDIX C

SELECTION OF FIFTH WHEEL ASSEMBLIES
(This Appendix does not form an integral part *of* this Standard.)

C1 SCOPE. This Appendix sets out equations for the calculation of required D-value ratings to facilitate the selection *of* fifth wheel assemblies.

NOTES:

1. Fifth wheel assemblies should he selected so as to have a D-value rating which equals or exceeds the value calculated using the appropriate equation given in this Appendix. However, where the installation of the assembly reduces the fore-aft pitch angles to less than that specified in Clause 3.2 (e.g. restricted oscillation fifth wheels on converter dollies) additional
   - loadings may occur in the fifth wheel and it may be necessary to use a fifth wheel with a higher rating. Stronger components with higher ratings may also be necessary for particular applications outside the scope of this Standard, e.g. in off-road operations.
2. Fifth wheel assemblies on converter dollies should be chosen so as to allow their use in triple road trains operating at maximum permissible loads to avoid compatibility problems.
3. Where both a fifth wheel and a kingpin are D-value rated and are connected in a vehicle combination. the component with the lower rating will determine the overall rating for that towing connection. Where a D-value rated fifth wheel and a M-rated kingpin are connected in a vehicle combination. the overall connection will be regarded as M-rated. The rating of kingpins is specified in AS 2175.

C2 CALCULATION OF REQUIRED D-VALUE RATINGS. The minimum D-value rating for a particular application can be determined from the appropriate equation as follows:

NOTE: The calculated D-value should be rounded up to an integral value.

For an articulated vehicle with one trailer:

$$D = \frac{5.9\,TR}{M} \qquad \text{C2(1)}$$

For the coupling on a prime mover towing more than one trailer:

$$D = \frac{4.9R\,(T + 0.08R)}{M} \qquad \text{C2(2)}$$

For the coupling on a converter dolly:

$$D = \frac{4.9T\,(R + 0.08T)}{M - U_{act}} \qquad \text{C2(3)}$$

Where

D = D-value. in kilonewtons

M - Gross combination mass in tonnes

T = sum *or* the maximum towing vehicle(s) axle loads. in tonnes

NOTE. For a coupling on a converter dolly this is the maximum laden mass of all vehicles ahead of the converter dolly plus the tare man of the converter dolly

U = actual maximum vertical fifth wheel loading, in tonnes

R = sum of the maximum towed vehicle(s) axle loads plus the static mass (U.,) carried by the coupling. in tonnes.

NOTE: Fifth wheel assemblies approved under *ECE Regulation* 55 are marked with a rating for T and R in the form *T/R tonne (e.g. '15/27 tonne' where T - 15 t and R - 27 t). This rating may he converted to a D-value using the following equation-

$$D = \frac{5.9TR}{T + R - U_{act}}.$$

~~**C3 D_VALUES FOR PARTICULAR VEHICLE COMBINATIONS** A number of typical vehicle combinations and the corresponding D-values are given in Tables C1 to C3. Where applicable, the tare mass of a converter dolly has been assumed to be 2.5 t~~

Section 3.1.1.4

SECTION 2 RATING

2.1 GENERAL. Fifth wheels shall be rated by a D-value rating. The rating shall be expressed in integral numbers, in kilonewtons (see also Clause 1.4.3). For the determination and verification of this rating. the tests described in Appendix A and Appendix B shall be performed in accordance with Clause 2.2.

2.2 TEST PERFORMANCE. When a single fifth wheel assembly is tested in accordance with both Appendix A and Appendix B, no component of the assembly shall show any residua'. deformation that would interfere with or degrade the function of the assembly, nor shall there be any breaks, cracks, separation of components, malfunction. nor wear in excess of the following limits, when measured
in any direction (see Figure 3.2):

(a) Fifth wheels for 50 mm kingpins:
  (i) Dimension A (maximum)……53 mm.
  (ii) Dimension B (minimum)…….22 mm.
(b) Fifth wheels for 90 mm kingpins:
  (i) Dimension A (maximum)……92 ram.
  (ii) Dimension B (minimum)…….22 mm.

NOTE: The above wear limits are also recommended wear limits for in-service operations (see Appendix D).

Section 3.1.1.4

AS 1773 – 1990 8

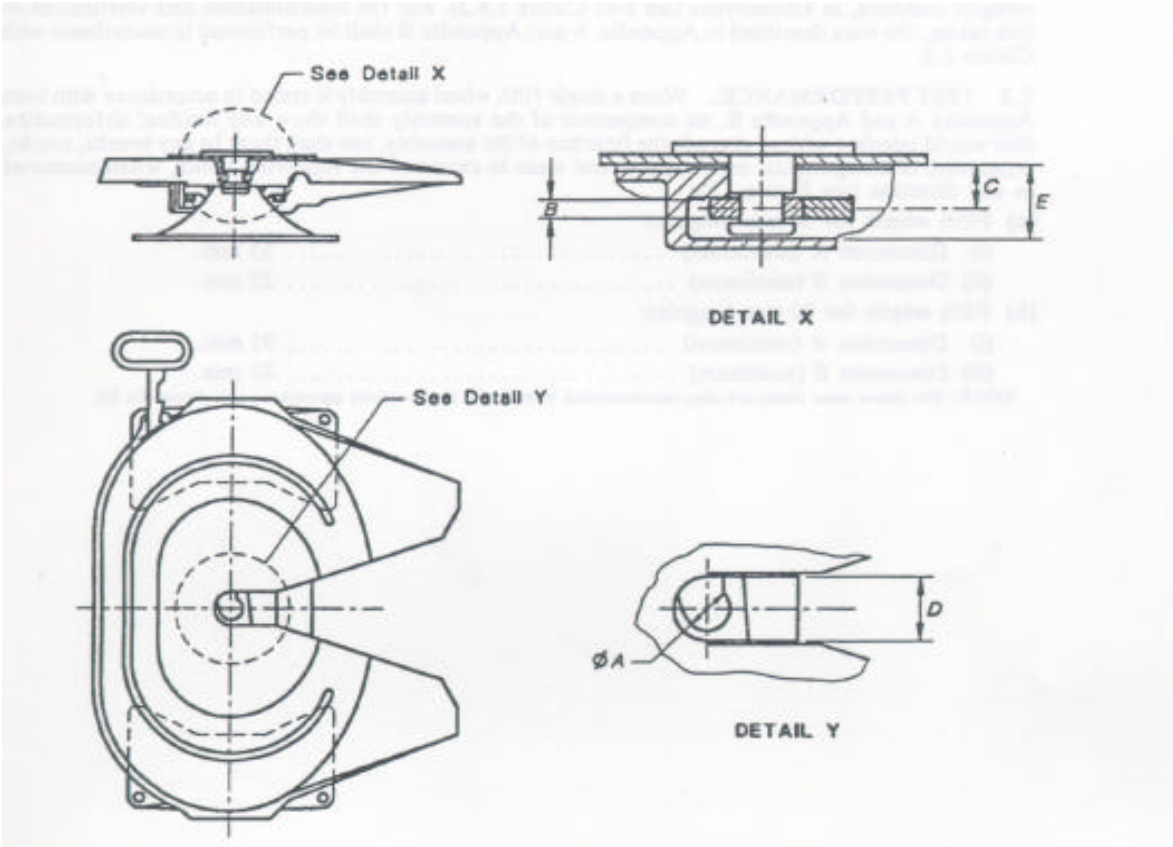

Millimetres

Type of fifth wheel	Closed jaw diameter *A*		Jaw thickness *B*		Coupler plate jaw centreline *C*		Coupler plate throat *D*		Couplier plate well depth *E*
	Nom	Tolerance	Nom	Tolerance	Nom	Tolerance	Nom	Tolernace	(min)
50 mm	51.0	+0.4, - 0	25	+0, - 3	52	+2, - 1	73.5	+1, - 0	88
~~90 mm~~	~~89,4~~	~~+0.3, - 0~~	~~25~~	~~+0, - 3~~	~~40~~	~~+2, - 1~~	~~114.3~~	~~+1.5, - 0~~	~~79~~

NOTES:

1. This Figure shows a typical locking system. Other locking systerns are not prohibited.
2. All dimensions relate to the locked position of the f-afth wheel.
3. The jaw engagement on the joumal of the kingpin (we AS 2175) should entirely rat within the envelope defined by the dimensions 8 and C.
4. The closed jaw diameter and the jaw thickness should be considered in conjunction with the wear limits specified in Clause 2.2.

FIGURE 3.2 DIMENSIONAL REQUIREMENTS FOR INTERCHANGEABILITY

3.12 Fifth Wheel Wingpins (Clause 62.532)

The following test procedures for these Kingpins is reproduced from AS 2175-1990 "Articulated Vehicles Kingpins'.

Procedures from AS 2175 are:

3.12.1 Appendix A - Dynamic Test Method

3.12.1.1 Section 2. Rating

3.1.2.1.2 Figure 4.1 Basic Dimensions of Kingpins.

3.1.2.2 Appendix B - Selection of D-Rated Kingpins. This appendix describes the method of calculating the D -rating of a kingpin for use in the Dynamic Test Method, referred to in Appendix A, Section 3.1.2.1.

3.1.2.3 Appendix D - Describes the methods of attachment of the test kingpin to the senu-trailer skid plate fixture for testing as described in Section 3.1.2.1, Appendix A.

Section 3.1.2.1

APPENDIX A

DYNAMIC TEST METHOD
(This Appendix forms an integral part of this Standard.)

A1 SCOPE. This Appendix sets out a method for dynamic testing of D-rated kingpins.

A2 PRINCIPLE. A horizontal alternating test load is applied for a specified number of cycles.

A3 APPARATUS. A test rig is required incorporating a test bed simulating the trailer skid plate to mount the kingpin. An alternating horizontal loading shall be applied at the centre of the kingpin journal by a device simulating fifth wheel jaws, as shown in Figure A1.
The attachment of the kingpin to the simulated trailer skid plate should be in accordance with Appendix D.

A4 PROCEDURE.

A4.1 Inspection before testing. Before the test the kingpin shall be inspected by magnetic particle inspection using the procedures outlined in AS 1171. The results shall be recorded and shall indicate that the kingpin to be tested is free of cracks.
Measurements of dimensions *F*, *G*, and *H* (see Clause 2.2 and Figure 4.1) and suitable other measurements shall be taken and recorded to allow the determination of wear and permanent deformation after the dynamic test (see Paragraph A4.4).

A4.2 Installation of kingpin. The kingpin shall be mounted on the test bed in a position geometrically identical with the position it will be mounted on the skid plate, and with the same mechanical attachments as nominated by the kingpin manufacturer.

A4.3 Dynamic test load. The test load (D_T) shall be alternating in a sinusoidal manner. It shall alternate between + 0.6*D* and - 0.6*D* where *D* is the relevant D-value rating (in kilonewtons). The number of cycles shall be not less than 2 X 10^6. See Appendix B Calculation of D-Value
The selected frequency shall not exceed 30 Hz, and shall be chosen not to coincide with the natural frequency of the system.

A4.4 Inspection after testing. At the completion of the loading cycles, the kingpin shall be inspected for any residual deformation that would interfere with or degrade the function of the kingpin. and for any breaks, cracks, separation of components, or wear. The measurement and inspection techniques shall be the same as for the inspection before testing (see Paragraph A4. 1), and the results shall be recorded.

A5 REPORT. The test report shall include the following information:
(a) Kingpin identification (e.g. serial number), and nominal size of kingpin (i.e. 50 mm ~~or 90 ;nm~~)
(b) Test loading, cycle rate, and number of cycles.
(c) Description of test apparatus.
(d) A statement whether there was any residual deformation that would interfere with or degrade the function of the kingpin, or any breaks, cracks, separation of components, or wear.
(f) A statement indicating the inspection procedures before and after testing and an illustration of the measurements taken for the determination of wear and residual deformation (see Paragraphs A4.1 and A4.4), including the values for dimensions *F*, *G*, and *H* (see Clause 2.2 and Figure 4.1) before and after testing.
~~(g) A reference to this test method, i.e. AS 2175, Appendix A~~

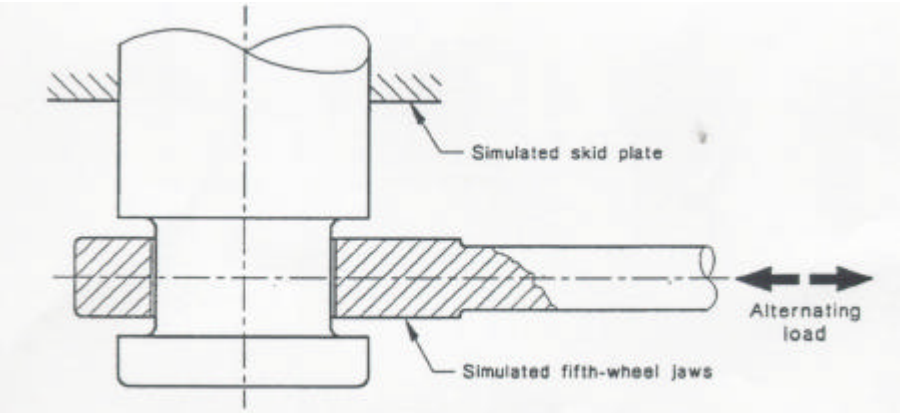

FIGURE A1 APPLICATION OF DYNAMIC LOADING

Section 3.1.2.1.1

SECTION 2 RATING

2.2 RATING BY D-VALUE (D-RATED KINGPINS). When a D-rated kingpin is tested in accordance with Appendix A, there shall be no residual deformation that would interfere with or degrade the function of the kingpin, nor shall there be any breaks, cracks, or separation of components, nor wear in excess of the following limits, when measured in any direction (see Figure 4. l):

(a) 50 mm kingpins:

(i) Dimension F (minimum) .....49 mm

(ii) Dimension G (minimum) .....71 mm

(iii) Dimension H (maximum) .....73 mm

Section 3.1.2.1.2

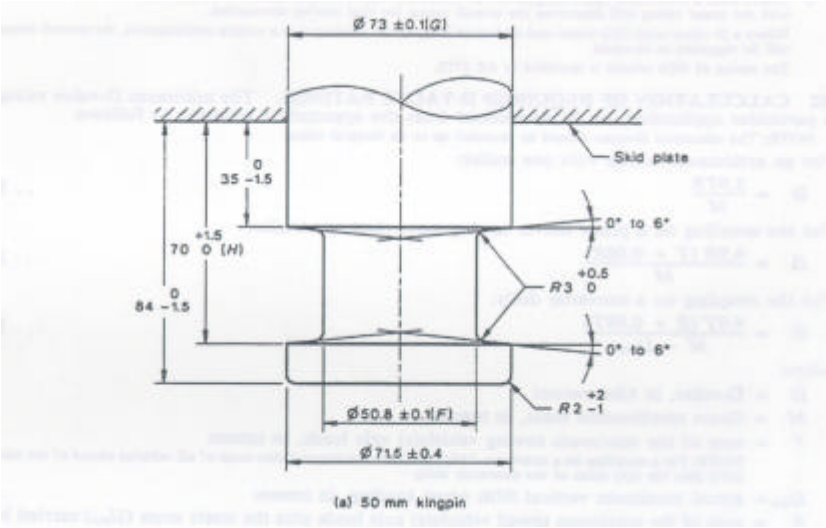

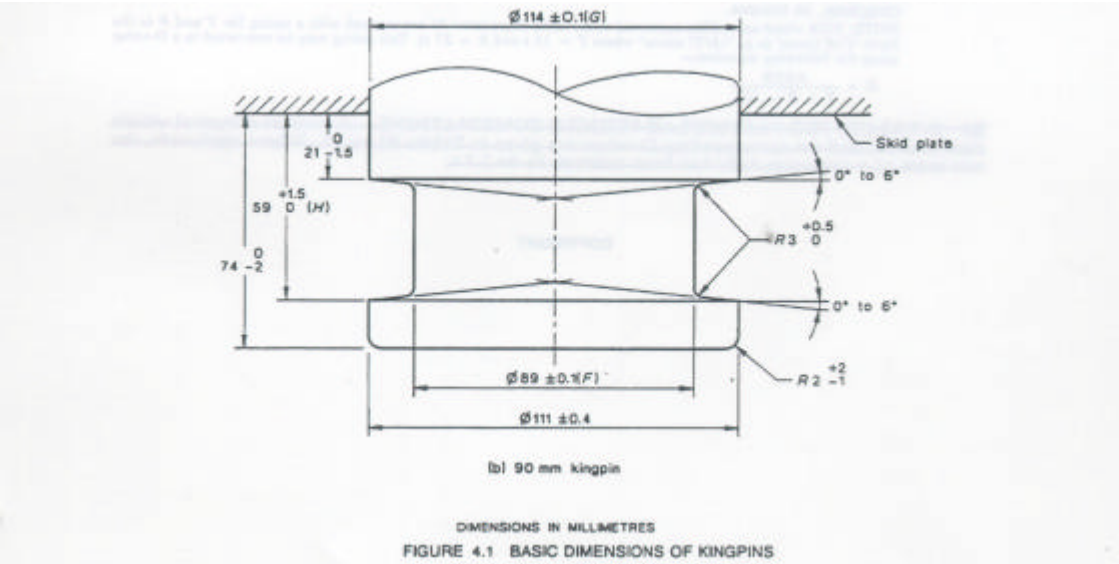

FIGURE 4.1 BASIC DIMENSIONS OF KINGPINS

Section 3.1.2.2

15 AS 2175-1990

APPENDIX B

SELECTION OF D-RATED KINGPINS
(This Appendix does not form an integral part of this Standard.)

B1 SCOPE. This Appendix sets out equations for the calculation of required D-value ratings to facilitate the selection of kingpins.

NOTES:

1. Kingpins should be selected so as to have a D-value rating which equals; or exceeds the value calculated using the equations given in this Appendix. However, stronger components with higher ratings may be necessary for particular applications outside the scope of this Standard, e.g. in off-road operations (see also Clause 1.1).
2. Wherc both a fifth wheel and a kingpin are D-value rated and are connected in a vehicle combination. the component with the lower rating will determine the overall rating for that towing connection.
   Where a D-value rated fifth wheel and a M-rated kingpin are connected in a vehicle combination. the overall connection will be regarded as M-rated.
   The rating of fifth wheels is specified in AS 1773.

B2 CALCULATION OF REQUIRED D-VALUE RATINGS. The minimum D-value rating for a particular application can be determined from the appropriate equation as follows:

NOTE: The calculated D-value should be rounded up to an integral value. For an articulated vehicle with one trailer:

$$D = \frac{5.9TR}{M} \qquad \text{….B2(1)}$$

For the coupling on a prime mover towing more than one trailer:

$$D = \frac{4.9R\,(T + 0.08R)}{M} \qquad \text{…B2(2)}$$

For the coupling on a converter dolly:

$$D = \frac{4.9T\,(R + 0.08T)}{M - U_{act}} \qquad \text{…B2(3)}$$

where

D = D-value, in kilonewtons

M = Gross combination mass, in tonnes

T = sum of the maximum towing vehicle(s) axle loads, in tonnes
NOTE: For a coupling on a converter dolly this is the maximum laden mass of all vehicles ahead of the converter dolly plus the tare mass of the converter dolly

U_{act} = actual maximum vertical fifth wheel loading, in tonnes

R = sum of the maximum towed vehicle(s) axle loads plus the static mass (U_{act}) carried by the coupling, in tonnes.
NOTE: Fifth wheel assemblies approved under *ECE* Regulation 55 are marked with a rating for T and R in the form '77R tonne' (e.g. '15/27 tonne' where T = 15 t and $R = 27$ t). This rating may be converted to a D-value using the following equation -

$$D = \frac{5.9TR}{T + R - U_{act}}$$

~~**B3 D-VALUES FOR PARTICULAR VEHICLE COMBINATIONS**. A number of typical vehicle combinations and the corresponding D-values are given in Tables B1 to B3. Where applicable, the tare mass of a converter dolly has been assumed to be 2.5 t.~~

COPYRIGHT

Section 3.1.23

APPENDIX D
GUIDELINES FOR THE ATTACHMENT OF KINGPIN TO SKID PLATE
(This Appendix does not form an integral part of this Standard.)

D1 SCOPE. This Appendix sets out recommendations for the attachment of a kingpin to the semitrailer skid plate.

NOTE: Although the recommendations on methods of attachments are not mandatory in this Standard, they may be specifiedas statutory requirements by Regulatory Authorities if considered appropriate.

D2 STRENGTH OF ATTACHMENT. A recommended method for evaluating the strength of attachment of a kingpin is illustrated in Figure D1.
The test frame shown in Figure D2 is attached to the kingpin and a horizontal force (F_h) is applied to the test frame (e.g. through a hydraulic ram) such that this force (F_h) multiplied by the vertical displacement from the skid plate (V_d), gives a moment of not less than 112 kN.m (as illustrated in the Figure D1). The value of the displacement (V_d) should be between 440 mm and 460 min.
The kingpin and skid plate should be capable of withstanding the resulting static horizontal and vertical loads without failure or permanent deformation for at least 30 s**.**

D3 METHODS OF ATTACHMENT. The kingpin should preferably be attached to the skid plate by bolting to a housing which has been welded to the skid plate (see Note 1).
For flange bolt-in kingpins, the bolts used should he of Grade 8.8 in accordance with AS 1110 and as shown in Figure 4.2. The bolt should be tightened to a torque of 120 N.m to 140 N.m for M16 bolts or 330 N.m to 370 N.m for M20 bolts. Adequate provision for locking shall be made, e.g. wire locking. Spring washers are not permissible.

If the kingpin is to be welded to the skid plate, a suitable design must be used which allows the welding to be applied sufficiently far from the critical areas of the pin to prevent adverse heat effects. Welding is not permissible in the zone bounded by the broken line in Figure 4.5 (see Clause 4.3). All welding must be subject to process control, in particular preheating of the immediate weld zone to not less than 200 °C and not more than 300 °C (see Note 2), use of low hydrogen techniques, and where necessary post-weld heat treatment.

When fixed in position, the kingpin axis must be at an angle of 90 1 0 to the skid plate in all directions.

NOTES:

1. Bolt-in kingpins are preferred as they are easier to replace once worn. and are not prone to localized heat effects from welding.
2. A preheating temperature of 300°C should not be exceeded under any circumstances.

Section 3.1.2.4

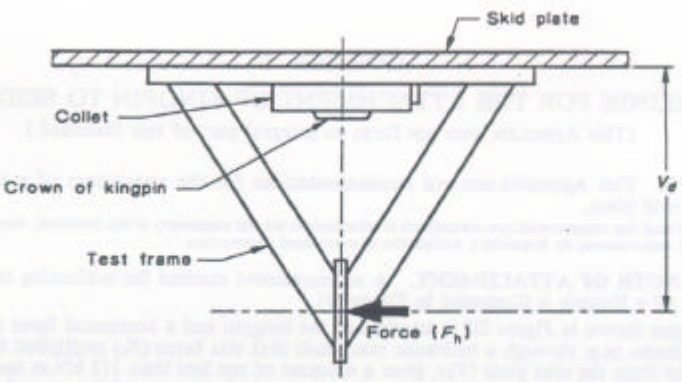

FIGURE D1 APPLICATION OF STATIC LOADS

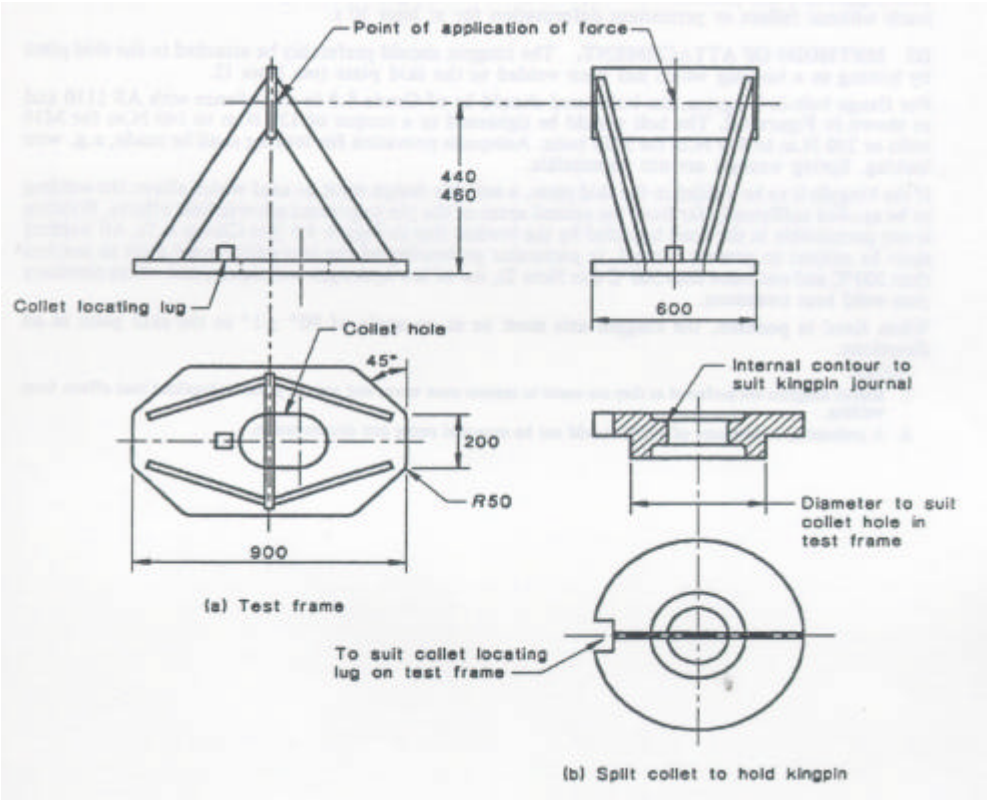

DIMENSIONS IN MILLIMETRES

FIGURE D2 TEST FRAME

3.1.3 50 mm Pin Type Couplings (Clause 62.5-3-3)
Test procedures for 50 mm Pin Type Couplings are reproduced from AS 2213-1984 "50 mm Pin Type Couplings and Drawbar Eyes for Trailers". Procedures from AS 2213-1984 are:
3.1.3.1 Section 4 - Methods of Selecting Couplings and Drawbar Eyes for a Particular Application.

This section describes the method of calculating D-value being the dynamic load rating for combinations of drawing vehicles and trailers for use in testing the coupling assembly.
3.1.3.2 Section 5 - Methods of Testing Couplings and Drawbar Eyes

SECTION 4. METHOD OF SELECTING COUPLINGS AND DRAWBAR EYES FOR A PARTICULAR APPLICATION

4.1 METHOD. Trailer couplings and drawbar eyes shall be rated by their manufacturer for a particular D-value (in tonnes) and tested in accordance with Section 5. All couplings and eyes for use in a particular combination shall be selected by using the appropriate formula as follows:

For a rigid truck with one trailer:

$$D = \frac{G_k \times G_A}{G_k + G_A} \quad \ldots\ldots\ldots\ldots\ldots\ldots\ldots\ldots (1)$$

For an articulated vehicle with one trailer:

$$D = 0.7\,\frac{G_k \times G_A}{G_k + G_A} \quad \ldots\ldots\ldots\ldots\ldots\ldots\ldots (2)$$

For a rigid truck with two trailers:

$$D = 0.85\,\frac{G_k \times G_A}{G_k + G_A} \quad \ldots\ldots\ldots\ldots\ldots\ldots\ldots (3)$$

For an articulated vehicle with two trailers:

$$D = 0.65\,\frac{G_k \times G_A}{G_k + G_A} \quad \ldots\ldots\ldots\ldots\ldots\ldots (4)$$

For a rigid truck with three trailers:

$$D = \frac{G_k \times G_A}{G_k + G_A} \quad \ldots\ldots\ldots\ldots\ldots\ldots\ldots (5)$$

where

D = D-value, in tonnes

G_k = maximum mass in the combination ahead of the foremost pin coupling, in tonnes
G_A = maximum mass in the combination behind the foremost pin coupling, in tonnes

SECTION 5. METHOD OF TESTING COUPLINGS AND DRAWBAR EYES

5.1 TEST METHOD. The coupling and drawbar eye shall be mounted on a test bed in positions geometrically identical with the positions in which they will he mounted on the vehicles, and with the same mechanical attachments as nominated by the coupling manufacturer for mounting. Rubber or flexible components may be replaced with steel components of the same size prior to testing.

The drawbar shall be in the straight-ahead position, but inclined to the vertical at an angle of inclination a determined from the following equation:

$$\tan a = \frac{1.5F_V}{1.2F_h}$$

where

F_V = rated vertical load, in tonnes
F_h = rated D-value, in tonnes

The coupling and drawbar eye shall then be subjected to an oscillating test load in accordance with Clause 5.2.

5.2 TEST LOAD.
5.2.1 Magnitude. The oscillating test load FP shall

be determined from the following equation:

$$F_P = v\,(F_h^2 + F_V^2)$$

where

F_P = oscillating test load, in tonnes
F_h = 1.2 x rated D-value, in tonnes
F_V. = 1.5 x rated vertical load, in tonnes

5.2.2 Application. The oscillating test load shall be applied as follows:

(a) Where slack is present between the coupling pin and drawbar eye, the load shall be applied in tension, and shall oscillate between zero and F_P.
(b) Where a special stack-free coupling pin or a special slack-free drawbar eye is used, the load shall he applied alternately in tension and compression, and shall oscillate between $+0.5F_p$ and $-0.5F_p$.

In either case, the oscillating test load shall be applied for 2×10^6 cycles.

5.3 TEST CRITERIA. The coupling or drawbar eye shall not fail, and no evidence of cracking or physical deformation shall be visible.

3.1.4 50 mm Ball Couplings (Clause 62-5-3.4)

50 min Ball couplings consist of two parts

- 50 mm diameter coupling ball, attached to a towbar fixed to the drawing vehicle
- coupling body to accept a 50 inin coupling ball attached to the drawbar of a trailer.

AS D 18 1968 - 50 min Ball Couplings (for Automotive purposes)

- refers to the requirements and limits the towing capacity of such coupling assemblies to 5000 lb (2.27 t) (This standard is presently under review)

3.1.4.1 Compliance demonstration is by static test methods using a testing load factor of 3 times the rated capacity of the coupling ball or coupling body.

Coupling balls are tested at the maximum load rating of 2.27 t x 3 while the coupling body is tested at 3 times its rated capacity.

3.1.4.2 TEST EQU1PMENT

Test equipment for both components should consist of:

3.1.4.2.1 A universal testing machine with load capacity (at least 3 times the maximum capacity of the component being tested) to 10 t (or 100 kN) capable of measuring forces applied.

3.1.4.2.2 A substantial fixture (representing a trailer drawbar) to which the test coupling body is attached and fixed to the universal testing machine.

3.1.4.2.3 A 50 mm coupling ball and substantial tongue or lug representing the towbar which is attached to the other head of the universal testing machine.

NOTE 1 Care should be taken in testing that test forces are in alignment with the test components and the testing machine.

NOTE 2 See Annex A for typical illustrations of test fixtures for testing in the various directions concerned in the procedure.

3.1.4.3 Test Procedure for Coupling Body

The test coupling body shall be attached to the drawbar fixtures described above according to the manufacturers installation and adjustment instructions and the following static loads applied via the coupling ball as described in Section 3.1.4.2. (sequence is not important)

3.1.4.3.1 Forward longitudinal direction Test load, 3 times the aggregate trailer mass for which the coupling body is rated.

3.1.4.3.2 Rearward longitudinal direction Test load, 3 times the aggregate trailer mass for which the coupling body is rated.

3.1.4.3.3 Transverse direction Tests are to be carried out in both left hand and right hand directions.

Test load, 1 times the aggregate trailer mass for which the coupling body is rated.

3.1.4.3.4 Downward vertical direction Test load, 0.5 times the aggregate trailer mass for
which the coupling body is rated.

3.1.4.3.5 Upward vertical direction Test load, 0.5 times the aggregate trailer mass for which the coupling body is rated.

3.1.4.4 Test Procedure for Coupling Balls

The test coupling ball shall be attached to the test fixture representing the towbar tongue or lug according to the manufacturers instructions and a longitudinal static force of 66 kN applied through a correctly adjusted coupling body of sufficient capacity.

NOTE: This testing force in kN is 2.27 t x g x 3 test load factor

NOTE: $g = 9.81\ m/s^2$.

In each case the test load shall be held for a minimum of 1 second.

3.1.4.5 Analysis of Results

After the tests the coupling ball or coupling body shall be carefully examined.

There shall be no residual deformation that would interfere or degrade the function of the coupling body or coupling ball, nor shall there be any fractures or separation of components.

3.1.4.6 Reporting of Results

The Test Facility shall prepare a report describing the components tested, and their rating where applicable, the test equipment used, the forces and time attained during the tests, their direction and results of the examination of the test components after the test.

3.1.5 127 mm Ball Couplings (Clause 62.5.3.5)

127 mm Ball Couplings consist of two parts:

- 127 mm diameter coupling ball attached to a towing bracket on the drawing vehicle
- coupling body to accept the 127 mm coupling ball together with components for locking one to the other and attached to the drawbar of a trailer.

One of two test methods for compliance may be used:

- Static tests

:longitudinal tension and compression of the assembly of 1.6 D-Value (Clause 62.5.3.5.1.1) and

: vertical tension and compression of 0.5 times D - value (Clause 62.5.3.5.1.2) or

- Dynamic oscillating force 0.6 x D-Value in longitudinal direction and 0.2 x D in vertical direction applied concurrently. (Clause 65.5.3.5.1.3)

NOTE. Care must be taken in testing that the test forces are in alignment with the test components and the testing machines.

3.1.5.1 TEST EQUIPMENT

3.1.5.1.1 Static Test Equipment

A universal testing machine similar to that described in Section 3.1.4.2 above of adequate capacity together with suitable fixtures to which the coupling ball and coupling body may be

attached

3.1.5.1.2 Dynamic Test Equipment

A hydraulic testing system with appropriate valves and controls that is capable of applying oscillation forces of up to some 200 kN at a frequency not exceeding 10 HZ. The test frequency will need to be chosen not to coincide with the natural frequency of the system. Two rams are required to apply concurrent forces in the longitudinal direction and in the vertical direction. Equipment to measure oscillating forces, frequency and time are required together with protective systems for shutdown in the event of fracture or failure of the test components. The same control system shall be capable of applying the longitudinal and vertical forces so their frequency differs by some 5 %.

Fixtures are also required to attach the coupling body and coupling ball to the dynamic testing fixtures using fastenings recommended or supplied by the manufacturer.

3.1.5.1.3 Calculation of D-Value

D-Value, being the dynamic load in tonnes, shall be calculated for a particular combination of drawing vehicle and one or more trailers from the equations in Section 3.1.3. (AS 2213-1984)

This calculated value shall be used for the static and dynamic test methods.

3.1.5.2 Test Procedure

3.1.5.2.1 Static Test Procedure

Attach the test coupling ball and coupling body by the fixtures to the universal testing machine described in Section 3.1.5.1.1. The coupling body should be carefully adjusted to fit the coupling ball as instructed by the manufacturer. Apply the derived test load (taking account of instrument uncertainty)

- longitudinal tension and compression direction with a load of 1.6 x D -value.

Upon completion of the longitudinal test reset the fixtures and apply the derived load:

- in vertical tension and compression direction of 0.5 x D -value.

The test load should be steadily applied and held for a minimum of 1 second.

3.1.5.2.2 Dynamic Test-Procedure

Attach the test coupling ball and coupling body by the fixtures and fastening to the dynamic test rig described in Section 3.1.5.1.2 above. The coupling body shall be carefully adjusted to fit the coupling ball as instructed by the manufacturer. After calculation of D-value (Section 3.13.1.3) apply the dynamic oscillation force of

0.6 x D in longitudinal direction 0.2 x D in the vertical direction

These forces are to be applied concurrently for a minimum of 2 million cycles at a frequency not exceeding 10 HZ. The frequency between the forces being applied in the longitudinal and vertical direction shall differ by approximately 5%. Care should be taken that the test frequency does not coincide with the natural frequency of the system.

At regular intervals the test machine should be stopped and the fastenings and fixtures and test components checked for condition and security, resecuring as required.

At the end of the test period the test components shall be removed.

3.1.5.3 Analysis of Results

After the tests the coupling ball or coupling body shall be carefully examined.

There shall be no residual deformation that would interfere or degrade the function of the coupling body or coupling ball, nor shall there be any fractures or separation of components.

3.1.5.4 Reporting of Results

A report describing the testing method, static or dynamic, the components tested and their status, the equipment used, calculation of D-value, results of inspections during the dynamic test, and results of the examination of the test components after the test is completed shall be made.

3.1.6 Hook Couplings (Clause 62.5.3.6) Hook couplings consist of two parts:

- a pintle or hook towing device which is attached to the drawing vehicle
- a lunette or towing eye attached to the drawbar of the trailer.

The assembly is illustrated at Annex B, Figure 1.

One of two test methods for compliance maybe used:

- static longitudinal tension and compression of 1.6 x D -value or

dynamic oscillation force of 0.6 x D -value.

3.1.6.1 Test Equipment

3.1.6.1.1 Static Test Equipment

A universal testing machine and fixtures as described in Section 3.1.4.2 is suitable for this test.

3.1.6.1.2 Dynamic Test Equipment

The dynamic test rig and fixtures described in Section 3.1.5.12 is suitable for this test except that only one loading ram is required.

3.1.6.13 Calculation of D-Value

D-Value, being the dynamic load in tonnes, shall be calculated for a particular combination of drawing vehicle and one or more trailers from the equations in Section 3.1.3. (AS 2213-1994)

This calculated value shall be used for the static and dynamic test methods.

3.1.6.2 Test Procedure

3.1.6.2.1 Static Test

Attach the test book or pintle on a fixture representing the towbar attached to the drawing vehicle which is in turn attached to one head of the universal testing machine.

The lunette or towing eye shall be attached to a

fixture representing a trailer drawbar in turn attached to the other head of the testing machine and the eye engaged in the hook on the other head of the testing machine. (Section 3.1.4.2)

NOTE: Care shall be taken to ensure that the direction of application of the test loads on the test components is in alignment on the heads of the testing machine. Fastenings attaching the test components to the fixtures should represent those used during assembly of the components to the vehicles.

After calculation of D-Value (Section 3.1.6.1.3) apply the derived test load (taking into account instrument uncertainty) .

- longitudinal tension and compression with a load of 1.6 x D -Value

The test load should be steadily applied and held for a minimum of 1 second.

3.1.6.2.2 Dynamic Test

Attach the test hook or pintle and the towing eye or lunette to the fixtures on the dynamic testing machine (Section 3.1.6.1.2) using fastenings, representative of the vehicle installation and as recommended by the manufacturer.

NOTE: Care shall be taken to ensure that the direction of the oscillating forces on the test components are in alignment.

After calculation of D-Value apply the dynamic oscillation force of

- 0.6 x D -Value

Frequency during test not to exceed 10 HZ and shall not coincide with the natural frequency of the system.

At regular intervals during the test the test machine should be stopped and the fastening, fixtures and test components should be checked for condition and security.

After a testing period of 2 million cycles the test components shall be removed.

3.1.6.3 Analysis of Results

After the tests the coupling ball or coupling body shall be carefully examined. There shall be no residual deformation that would interfere or degrade the function of the coupling body or coupling ball, nor shall there be any fractures or separation of components.

3.1.6.4 Reporting of Results

A report describing the testing method, static or dynamic, the components tested and their status, the equipment used, calculation of D-value, results of inspections during the dynamic test, and results of the examination of the test components after the test is completed shall be made.

3.2 TOWBARS (Clause 62.6)

3.2.1 Towbars, attached to the towing vehicle structure (Clause 62.6.1) shall be tested by either dynamic or static load test procedure, dependent on the vehicle category

3.2.1.1 In the case of ME, NB and NC Category vehicles:

3.2.1.1.1 static longitudinal tension and : compression 1.6 x D-value' of the designated 'Coupling'; or

3.2.1.12 a dynamic oscillating force of ± 0.6 x M-value' of the designated 'Coupling' (Clause 62.6.1.1).

3.2.1.2 In the case of L-Group, MA, MB, MC, MD and NA Category vehicles:

- longitudinal tension and compression : 1.5 x the ‘Towbar’'s’ rated capacity,
- transverse thrust 0-5 x the “Towbar's” rated capacity., and
- vertical tension and compression : 0-5 x the ‘Towbar’s’ rated capacity. (Clause 62.6.1.2)

3.2.2 Calculation of D-Valuefor ME, NB and NC

Vehicles The D -value for the dynamic or static test force required for these vehicles may be calculated from the mass of the towing vehicle and the Aggregate Trailer Mass marked on the towbar, according to the following equation

$$D = \frac{GK \times GA}{GK - GN}$$

where

D = D-value in tonnes

GK = mass of towing vehicle in tonnes.

GA = aggregate trailer mass for which the towbar is rated in tonnes. (AS2213-1984 Section 4) (Section 3.1.3)

3.2.3 Test Equipment

323.1 Static test

The test rig shall consist of

- a structure to be capable of accepting the rear of a vehicle, or the relevant portion of a vehicle body to witch the towbar is attached
- fixtures to restrain the vehicle or body on the test rig during the test without affecting the vehicle structure in the area of the towbar attachment
- a loading device, usually a hydraulic cylinder, of sufficient capacity to apply the test loads, and with brackets to enable longitudinal, vertical and transverse loads to be applied
  : fixtures to attach the loading device to the towbar usually a towing coupling of appropriate size
- force measurement to measure the test load applied to the towtar maybe made by either
  : a pressure gauge, taking account of seal friction or
  : a load cell with appropriate power source, amplifiers and read out instrument
  : a recorder may be used to produce a permanent record of test load -v- time for the test.
- time measurement; stopwatch.

NOTE: Care should be taken when setting up the test components that the forces are applied in line with the

heads of the testing machine.

3.2.3.2 Dynamic Test Equipment

The dynamic test rig and fixtures described in Section 3.13.12 is suitable for this test except that the application of the oscillation load is only required in one direction.

3.2.4 Test Procedure

3.2.4.1 Static Test

The towbar shall be mounted to the vehicle body according to the towbar and vehicle manufacturers installation instructions using the fastening provided in the towbar installation kit tightened to their minimum tightening torque.

The loading device shall be attached to the towing tongue or lug of the towbar taking care that the direction of loading is aligned in the test direction.

3.2.4.1.1 Application of Test Loads for Vehicle Categories ME, NB and NC

From calculation of D-value (Section 322) and taking account of instrument uncertainty steadily apply a test force of 1.6 x D in longitudinal tension direction, followed by a test in the compression direction.

The test force shall be steadily applied and held for a minimum of one second. Remove the towbar from the test fixture for detailed examination.

3.2.4.1.2 Application of Test Loads for Vehicle Categories, L-Group, MA, MB, MC, MD and NA

From the aggregate trailer mass for which the towbar is rated apply the following static loads after application of a settling load of approximately 10% of the test load to the system. The test loads shall be gradually applied through a coupling ball and maintained for not less than 1 second. Sequence is not critical.

(a) Forward longitudinal load. Maximum load, 1.5 times the aggregate trailer mass for which the towbar is rated.

(b) Rearward longitudinal load. Maximum load, 1.5 times the aggregate trailer mass for which the towbar is rated.

(c) Transverse load. Tests are to be carried out in both left hand and right hand directions.

Maximum load, 0.5 times the aggregate trailer mass for which the towbar is rated.

(d) Downward vertical load. Maximum load, 0.5 times the aggregate trailer mass for which the towbar is rated.

(e) Upward vertical load Maximum load 0.5 times the aggregate trailer mass for which the towbar is rated.

After completion of the force applications the towbar shall be removed from the test rig and inspected.

3.2.4.2 Dynamic Test Procedure. Vehicle

Categories ME, NB and NC

The towbar shall be mounted on the vehicle body which has been fastened to the test rig, according to the towbar and vehicle manufacturers installation instructions using fasteners provided in the towbar installation kit, tightened to their minimum tightening torque.

The dynamic loading device shall be attached to the towbar coupling fixture using an appropriate coupling for the D-value rating of the towbar, taking care that the direction of application of the oscillating force is horizontal at the centre line of the system.

From the D-value calculated in Section 3.2.2 apply the oscillating dynamic load of ± 0.61D at a frequency of not exceeding 10 HZ for 2 million cycles. The test frequency shall be chosen not to coincide with the natural frequency of the system.

At regular intervals the test machine should be stopped and the towbar, its attachments and the vehicle structure carefully examined. If fastening torque is reduced they should be retightened to the correct torque and the test allowed to proceed.

3.2.4 Analysis of Results of Tests.

3.2.4.1 On completion of static or dynamic tests the towbar and vehicle structure to wtich it was attached shall be carefully examined.

3.2.4.2 The vehicle structure including the `Towbar' shall withstand the forces applied without any residual deformation that would interfere with or degrade the function of the assembly, nor shall there be any breaks, cracks, or separation of components, or the vehicle structure (Clause 62.6.1).

3.2.5 Reporting of Results.

The Test Facility shall prepare a report describing the components and vehicle tested, D -value where required, test loads, directions of application of the test load, whether the test was a static or a dynamic test and the results of the examination of the towbar and
vehicle structure.

3.3 SAFETY CHAIN ATTACHNIENTS (Clause 6222)

The static strength of safety chain attachments to the towbar shall be tested at the following load

- Longitudinal tension of the Towbars rated towing capacity
- Vertical load, 0.5 x the Towbars rated towing capacity Where the tow bar has a towing capacity of 2.5 t or
more it shall be fitted with 2 safety chain attachments each of which shall withstand the test loads above.

These tests are usually carried out together with the static load tests on the towbar as described in Section 3.2.

3.3.1 Test Equipment

The static load test equipment described in Section 3.2.3.1 is suitable for this test. The towbar may be
attached to a testing fixture on the test rig rather than a

vehicle body.

3.3.2 Test Procedure.

The loading device is attached usually by a suitable chain to each safety chain attachment in turn and the towbar rated towing capacity load applied as noted in Section 3.3 above, the load applied shall take account of instrument error and be held for a minimum of 1 second.

3.3.3 Analysis of Results.

On completion of the application of the test loads the safety chain attachments shall be carefully examined. The attachments shall not show any residual deformation that shall interfere with or degrade the function of the assembly, nor shall there by any breaks, cracks, or separation of components (Clause 62.6.2.1)

3.3.4 Reporting of Results

Tests on safety chain attachments to towbars are usually included in the report on the static test loads applied to the towbar as described in Section 3.2.

3.4 Drawbars

The drawbar fitted to a trailer shall be tested by application of a static test load. The loads applied shall be a function of the aggregate mass of the trailer and applied to the centreline of the towing coupling fitted to the drawbar. The trailer may have either a rigid drawbar or a hinged drawbar.

3.4.1 Equipment for Static Tests

Test equipment used for towbar testing described in Section 32 is suitable for testing drawbars.

3.4.2 Test Procedure

3.4.2.1 Drawbar. Securely attach the trailer in its roadwise position to the test rig so that application of the test loads is on the centre line of the drawbar. The body of the trailer shall be securely restrained on the test rig. Apply the test loads to the drawbar coupling as follows after taking account of instrument uncertainty

- longitudinal tension and compression = 1.5 x aggregate trailer mass
- transverse thrust = 0-5 x aggregate trailer mass
- for rigid drawbars, vertical tension and compression= 0.5 x aggregate trailer mass

3.4.2.2 For safety chain connections.

Apply the following loads to each attachment point

- longitudinal tension load 1 x aggregate trailer mass
- vertical loads 1 x aggregate trailer mass (Clause 62.7.3.1)

3.4.2 Analysis of Results

On completion of the tests the drawbar and its attachments to the trailer, and the safety chain attachments shall be carefully examined. The “Drawbar”and safety chain attachments shall withstand forces applied at the centreline of the intended “Coupling” without incurring loss of attachment or any distortion or failure which will affect the safe drawing of the towed trailer (Clause 62.7.1).

3.4.4 Reporting of Results

The Test Facility shall prepare a report describing the trailer and drawbar together with the safety chain attachments tested, the loads imposed, and the results of examination of the components after testing.

4 CALIBRATIONS AND ORDERS OF ACCURACY

4.1 Order of Accuracy

Except where specified in the ADR, referred documents, or extracts from Australian Standards, the following order of accuracy is considered to be commercially achievable and should be taken as a guide. Instrumentation of lesser accuracy is acceptable provided it is taken into account in determining the certainty of results. The time measurements should be determined within ± 1 % . The order of accuracy of load measurement may vary, depending on the system employed. In all cases, however, the tests must be conducted with the load reading equaling the calculated load plus maximum instrument error. A typical instrument system for load measurement would have an order of accuracy of ± 5 %. Care must be taken when using hydraulic cylinder pressure to indicate load that seal friction is taken into account when arriving at the test load and the pressure gauge should be calibrated against a load cell.

4.2 Calibration.

Routine calibration of load measuring equipment, electronic elements and recording equipment should be carried out in accordance with Circular 0-12-3. Prior to each series of tests it is desirable that the complete load measuring system be calibrated against a known standard, e.g. deadweight, universal testing machine or transfer calibration system at a number of points.

5 SUMMARY OF EVIDENCE REPORT

There is no Summary of Evidence Report required for ADR 62100. An assurance of compliance shall be given by completing form CA, Annex A (Application for Compliance Plate Approval) for this ADR.

5.1 Trailers

The Administrator has determined that trailers of an Aggregate Trailer Mass (ATM) less than 4.5 tonnes will not be subject to certification. In effect this means that manufacturers of those trailers will not be required to make an application to the Administrator for approval to affix a compliance plate to a particular model of trailer. Instead of type approval certification, manufacturers shall affix to each trailer that has been manufactured to comply with the applicable ADRs a plate containing the following information and statement:

- Manufacturer's name
- Trailer Vehicle Identification Number (VIN)
- A statement 'This trailer was manufactured to comply with the applicable Australian Design Rules'.

This information and statement maybe incorporated

into the trailer plate referred to above. It is the responsibility of the person or company manufacturing a trailer to ensure that the trailer, when first supplied to the market meets the requirements of the ADRs.

5.2 Registration

Registration of vehicles remains the responsibility of the States and Territories. Trailer manufacturers should consult the registering authority, where their trailers will be registered, for registration procedures (such as inspection).(Circular 0-2-7)

6 PROCEDURE FOR DESIGNS WITH CERTIFICATION TO ALTERNATIVE STANDARDS

There are no Alternative Standards for this Design Rule.

7 REFERENCES

ADR References

ADR Definitions
ADR 38/00 - Trailer Brake Systems
ADR 62/00 - Mechanical Connections between vehicles

Australian Standards

AS D-18-1968 50 rnm Ball Couplings (for Automotive Purposes) including Amendment 1
AS 1771-1987 Installation of Fifth Wheel and Turntable Assemblies
AS 1773-1990 Articulated Vehicles - Fifth Wheel Assemblies.
AS 1872-1976 Safety Chains for Trailers and Caravans.
AS 2174-1978 Recommendations for Positions and Heights of Fifth Wheels for Articulated Vehicles.
AS 2175-1990 Articulated Vehicles – Kingpins
AS 2213-1984 50 mm Pin Type Couplings and Drawbar Eyes for Trailers.
AS 2321-1979 Short Link Chain for Lifting Purposes.

Circulars

Circular 0-12-2 - General Requirements for Test Facilities.
Circular 0-12-3 - General Requirements for Calibration of Testing Equipment and Instrumentation.
Circular 0-3-5 - Trailer Make and Model Designation.
Circular 0-2-7 - Certification of Trailers less than 4-5 tonnes Aggregate Trailer Mass.
Circular 0-4-10 - Third Edition ADR's Certification Procedures for Trailers.

Other References

Vehicle Standards Bulletin No.1 Building Small Trailers, July 199 1, Issued by the Administrator.
ISO 1103 Road Vehicles - Caravans and Light Trailers Coupling Ball - Dimensional Characteristics
ISO 3853 Road Vehicles - Caravans and Light Trailers Towing Brackets and Coupling Balls - Strength Tests
SAE Standard J684 Trailer Couplings Hitches and Safety Chains - Automotive Type.
ECE R 55 Mechanical Coupling Components of Combinations of Vehicles.

8 ACKNOWLEDGEMENTS

The approval of Standards Australia to reproduce relevant parts of Australian Standards in this Circular is acknowledged.

ANNEX A

TYPICAL TEST FIXTURES FOR 50 mm COUPLING BALLS AND COUPLING BODIES

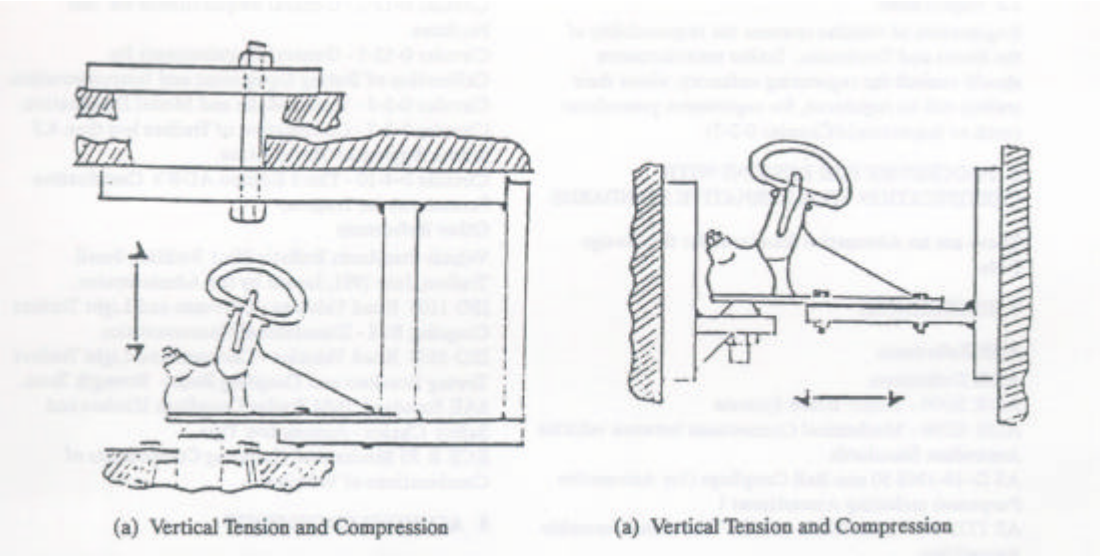

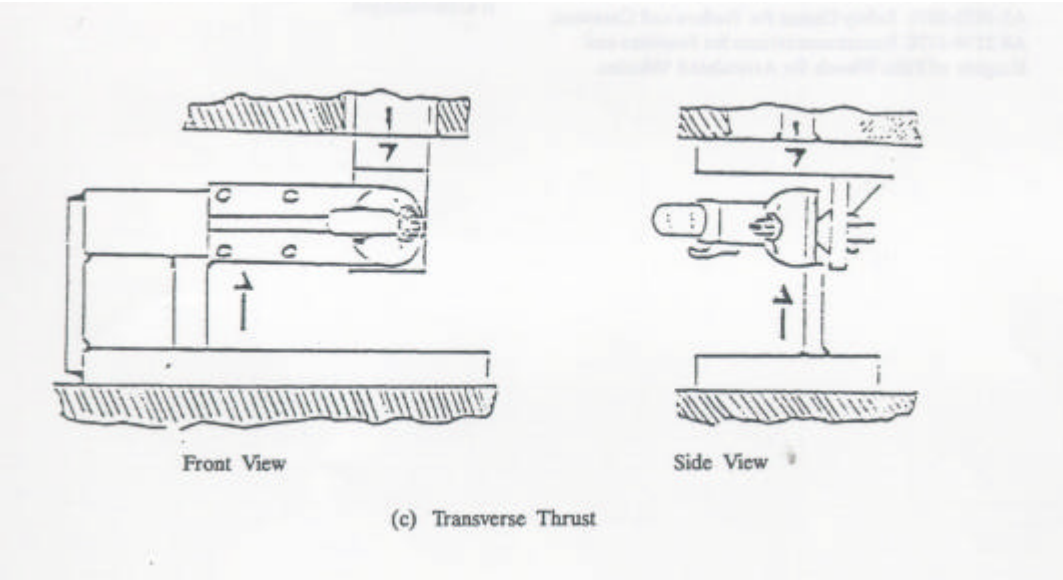

ANNEX B

Figure 1 Pintle Hook and Towing Eye